Technical Purchase Specification of ER316L bare wire for Tube to Tubesheet welding using GTAW process

P.I No. **Revision 01** **Date:03-01-2020**

S. No	Description	Requirement*
1	**Scope:**	This specification prescribes requirements for bare stainless steel wire for Tube to Tubesheet welding using Automatic/semiautomatic Gas Tungsten Arc Welding (GTAW) process. The welding consumable required in this specification shall be as per NPCIL approved brand list.
2	**Requirements**	The consumable will be used for Tube(Stainless Steel) to Tubesheet(Stainless Steel) welding.
2.1	Classification	The bare wire shall meet the requirements of SFA 5.9 of ASME Sec II C — ER316L classification alongwith modified requirements mentioned in this specification.
2.2	Chemical composition	Refer S. No. 4.1 of this specification.
2.3	Standard sizes and shapes	As per Table 2 of SFA 5.9 of ASME Sec II C.
2.4	Finish and Uniformity	As per clause 12 of SFA 5.9 of ASME Sec II C.
2.5	Standard Package Forms	As per clause 13 of SFA 5.9 of ASME Sec II C.
2.6	Winding Requirements	As per clause 14 of SFA 5.9 of ASME Sec II C .
2.7	Filler Metal Identification	As per clause 15 of SFA 5.9 of ASME Sec II C.
2.8	Packaging	As per clause 16 of SFA 5.9 of ASME Sec II C.
2.9	Marking of Packages	As per clause 17 of SFA 5.9 of ASME Sec II C.
3	**Batch Testing**	
3.1	Acceptance	The batch shall be deemed to be accepted only if it meets the testing requirements as mentioned in S. No. 4 of this specification.
3.2	Lot	The complete quantity of bare wire of a given size ordered shall be from a single heat/lot/batch (not more than 45 MT).
3.3	Lot Class	Lot class shall be S2 as per SFA 5.01 of ASME SEC II C.
3.4	Facilities for Batch testing	The manufacturer /supplier shall have all facilities to conduct batch testing as per S. No. 4 of this specification. If the manufacturer/supplier is not having facility for conducting any particular test(s) then manufacturer/supplier shall provide list of relevant testing facilities. The testing for such cases shall be done at NPCIL approved lab or NABL accredited lab. Acceptable to NPCIL

*All ASME standards referred in this specification shall be of Ed 2017

COPY RIGHT AND CONFIDENTIAL

The information on this document is the property of BHARAT HEAVY ELECTRICALS LIMITED. Hence not be used directly or indirectly in any way detrimental in the interest of the company

S. No	Description	Requirement
4	**Testing**	All tests mentioned in S. No. 4.1 to 4.5 shall be duly witnessed by BHEL and NPCIL.
4.1	Chemical Analysis	1) To be done in accordance with and shall meet the requirements of SFA 5.9 of ASME Sec II C. 2) The following elements in addition to those mentioned in Table 1 of SFA 5.9 of ASME Sec II C must be reported : "Cb + Ta" 3) The result of chemical analysis shall be reported as per subsection C of NB-2432.2 of ASME Sec III NB
4.2	IGC Test	The resistance to Intergranular Corrosion (IGC) shall be determined as per ASTM A262 Practice 'E'.
4.3	All weld metal tension test	As per Annexure I.
4.4	Radiographic Test	To be done and shall meet the acceptance criteria as per QW-191 of ASME Sec IX.
4.5	Delta Ferrite Determination	1) Delta Ferrite Determination to be done as per NB-2433 of ASME Sec III NB . 2) Method to be followed for determination of delta ferrite shall be in accordance with NB-2433.1 of ASME Sec III NB . 3) Acceptance Criteria shall be as per NB 2433.2 of ASME SEC III NB .
5	**Level of Testing**	As per schedule 6 or K of SFA 5.01 of ASME Sec II C.
6	**Quality Considerations**	
6.1	Information to be supplied in the bid	At the time of bidding the welding consumable supplier shall furnish all the relevant technical information regarding his product which shall include the recommended welding parameters and also instructions such as shielding gas etc.
6.2	Deviations	The bidder shall clearly state, if there are any deviations to the requirements of this specification.
6.3	Reports / Certificates	1. Signed and sealed test certificates of all the tests as specified in S. No. 4 of this specification shall be submitted in 6 original copies (with scanned PDF version on CD/USB drive) to BHEL. 2. An additional copy shall accompany the welding consumables in their package for shipment.
6.4	Calibration Report	All equipments used for conducting above mentioned tests must be calibrated and the callibration report shall be submitted to BHEL.

COPY RIGHT AND CONFIDENTIAL

The information on this document is the property of BHARAT HEAVY ELECTRICALS LIMITED. Hence not be used directly or indirectly in any way detrimental in the interest of the company

All weld Metal Tension Test

The procedures for All weld metal tension test should be in accordance with the latest edition of AWS B4.0 .

One All weld metal tension test specimen shall be taken out of the welded test assembly and the mechanical properties shall meet the following requirements:

Tensile strength min. (at Room Temperature)	490 MPa
Yield strength (0.2 % proof stress at RT)	To be reported
% Elongation	To be reported

Note : Refer Annexure II for Specimen location.

Annexure-II to BHEL/NPCIL/30447/FBM/WD&T/NU13 Rev 01

S. No.	Specimen	Size of specimen Φ/WxTxL	Identification	Position
1	All weld metal tension test	As per AWS B4.0	1	Longitudnal

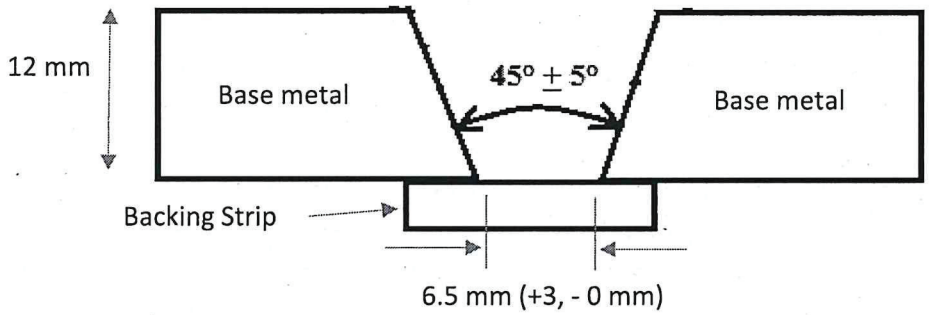

Fig. 1

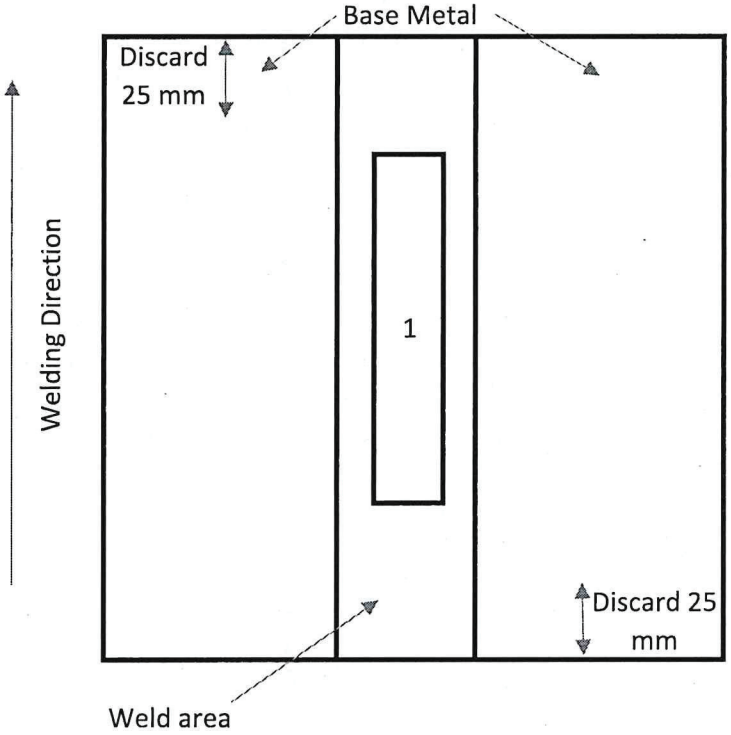

Note:

1. The base metal plates shall be of SA 240 TP 304L or equivalent material (Size : 150 x 250 x 12 mm each). The test assembly as shown in the Fig.1 shall be welded with the bare wire(required in this specification) using GTAW process.
2. The Backing Strip shall be of same material as that of base metal and its dimension shall be 150 x 25 x 5 mm.
3. The backing strip shall be removed, and the weld on both sides of the assembly shall be machined or ground smooth and flush with the original surfaces of the base plate.